PRODUCT CATALOG

Indoor/Outdoor Display Bases • Pallet Jack / Forkliftable **Dunnage Racks • Anti-Microbial Protection**

OVER 80 BASE SIZES TO CHOOSE FROM!

10 Year WARRANTY

PolyMight 182212 HD	18"W x 22"D x 12"H Wt. Cap.: 750 lbs.

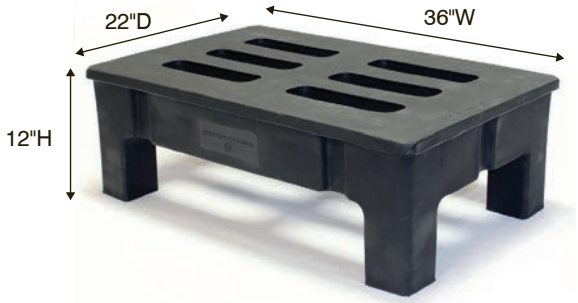

PolyMight 362212 HD	36"W x 22"D x 12"H Wt. Cap.: 1200 lbs./XHD 1500 lbs.

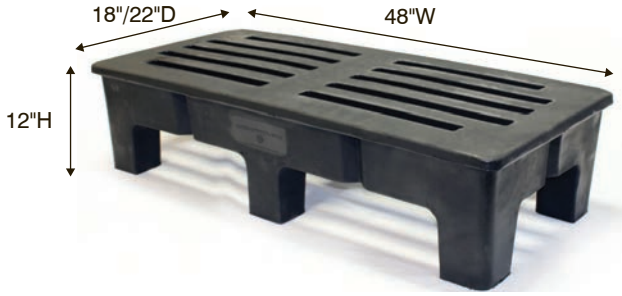

PolyMight 481812 HD	48"W x 18"D x 12"H Wt. Cap.: 1500 lbs.
PolyMight 482212 HD	48"W x 22"D x 12"H Wt. Cap.: 2000 lbs./XHD 4000 lbs.

NSF Product listed above are NSF approved and manufactured with USDA materials.

PolyMight 602212 HD	60"W x 22"D x 12"H Wt. Cap.: 1750 lbs. XHD 3500 lbs.
PolyMight 603012 HD	60"W x 30"D x 12"H Wt. Cap.: 2500 lbs.
PolyMight 603612 HD	60"W x 36"D x 12"H Wt. Cap.: 2500 lbs.

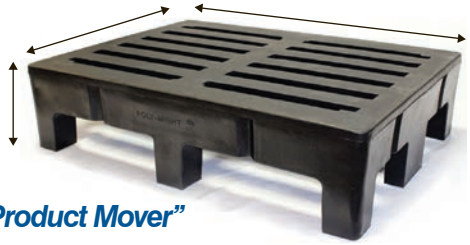

"The Product Mover"

PolyMight 483612 HD	48"W x 36"D x 12"H Wt. Cap.: 2500 lbs.

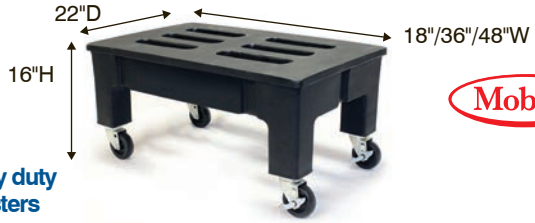

Mobile!

• Heavy duty 4" casters

PolyMight 182216 HDC	18"W x 22"D x 16"H Wt. Cap.: 750 lbs.
PolyMight 362216 HDC	36"W x 22"D x 16"H Wt. Cap.: 1200 lbs.
PolyMight 482216 HDC	48"W x 22"D x 16"H Wt. Cap.: 2000 lbs.

MasonWays™
INDESTRUCTIBLE PLASTICS LLC
Plants: Georgia • Ohio • Indiana • Oregon • Canada

Phone **800-837-2881**
Fax **800-693-7745**
www.masonways.com

PRODUCT CATALOG

Solid Top Display Bases

10 Year WARRANTY

Low Profile • Spot Merchandisers
End Caps • Side Stacks

Slim Jim — Solid Top Narrow Racks

36128 SJ	36"W x 12"D x 8"H	Wt. Cap: 750 lbs.	4 legs
48128 SJ	48"W x 12"D x 8"H	Wt. Cap: 1000 lbs.	4 legs
60128 SJ	60"W x 12"D x 8"H	Wt. Cap: 1200 lbs.	6 legs

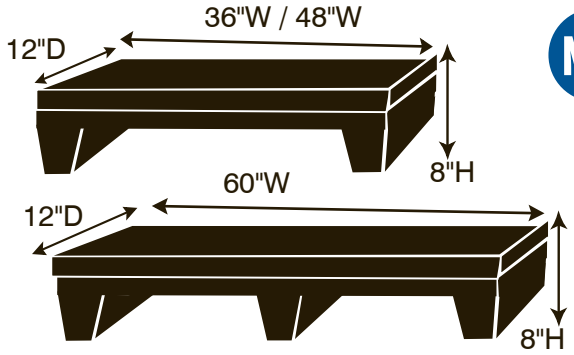

NSF

482412 PP — 48"W x 24"D x 12"H
Wt. Cap.: 2000 lbs.

POLYPLAT Display Base
- Extra Heavy Duty
- Expandable

Dogbone Connectors optional

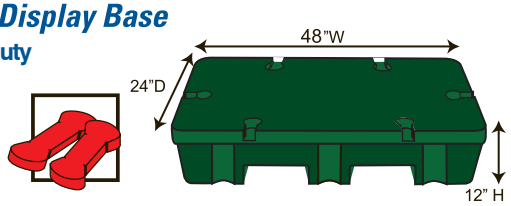

24186 PP — 24"W x 18"D x 6"H
Wt. Cap.: 1000 lbs.

Side Stack
- 2 way entry

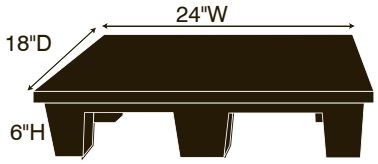

24244 — 24"W x 24"D x 4"H
Wt. Cap.: 750 lbs.

31313 — 31"W x 31"D x 3"H
Wt. Cap.: 750 lbs. Low Profile

Spot Merchandiser
- Kickplate
- Available with casters: 24244 SFC

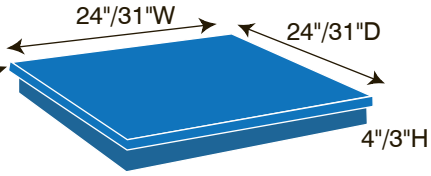

26237 — 26"W x 23"D x 7"H

Spot Merchandiser
- Stack bagged products
- Curved Graphic area

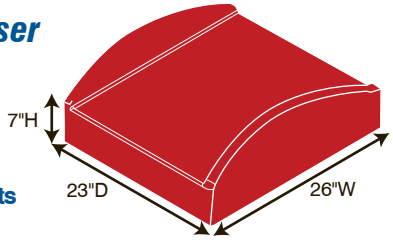

30126 — 30"W x 12"D x 6"H
Wt. Cap.: 750 lbs.

30186 — 30"W x 18"D x 6"H
Wt. Cap.: 750 lbs.

Side Stack
- 2 way entry

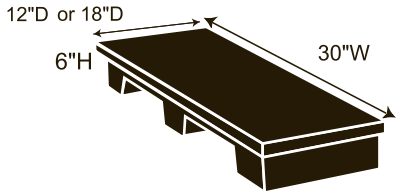

36186 HP/FL — 36"W x 18"D x 6"H
Wt. Cap.: 1000 lbs.

48186 HP/FL — 48"W x 18"D x 6"H
Wt. Cap.: 1000 lbs.

Side Stack
Solid Front Available: Model 36186 SF

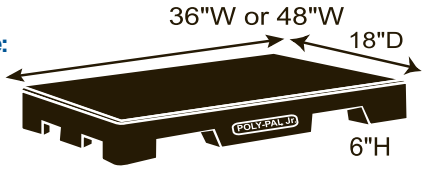

36246 HP/FL — 36"W x 24"D x 6"H
Wt. Cap.: 1000 lbs.

- 4 way entry

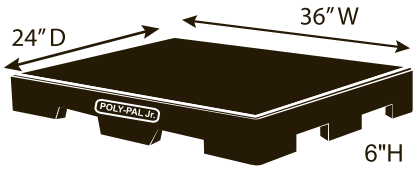

36366 — 36"W x 36"D x 6"H
Wt. Cap.: 1000 lbs.

Spot Merchandiser
- 2 way entry

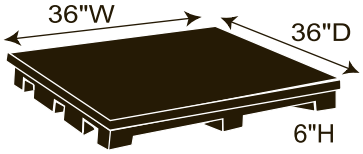

PRODUCT CATALOG

Display Bases • Spot Merchandisers, End Caps • Side Stacks

10 Year WARRANTY

Low Profile Pallet Jack / Forkliftable

48206 HP/FL
40206 HP/FL

48"W x 20"D x 6"H
Wt. Cap.: 1000 lbs.
40"W x 20"D x 6"H
Wt. Cap.: 1000 lbs.

Side Stack

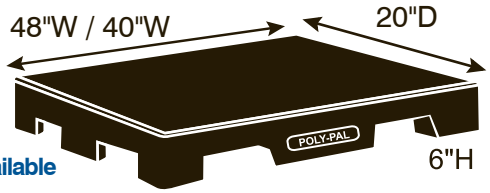

- 4 way entry
- 40206 also available with solid front

40206 SF

40"W x 20"D x 6"H
Wt. Cap.: 1000 lbs.

Spot Merchandiser

- Solid front
- 2 way entry

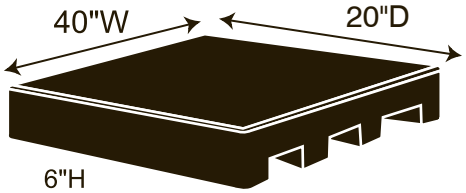

42306

42"W x 30"D x 6"H
Wt. Cap.: 2000 lbs.

Spot Merchandiser

- 2 way entry

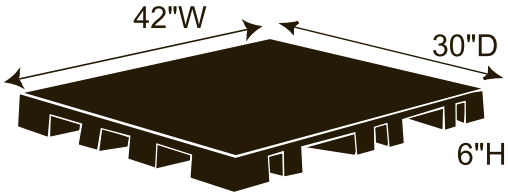

48246 HP/FL

48"W x 24"D x 6"H
Wt. Cap.: 1200 lbs.

End Cap

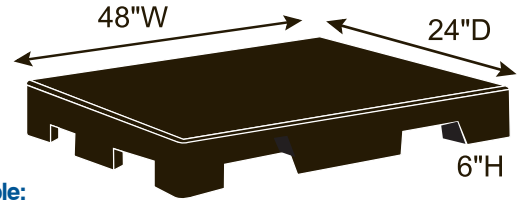

Also Available:
Model 48246 SFC with casters
Model 48246 SF Solid front/2 way entry

All product listed are Pallet Jack / Forkliftable. Optional Side Channels.

48366 SF

48"W x 36"D x 6"H
Wt. Cap.: 1500 lbs.

End Cap

- 2 way entry

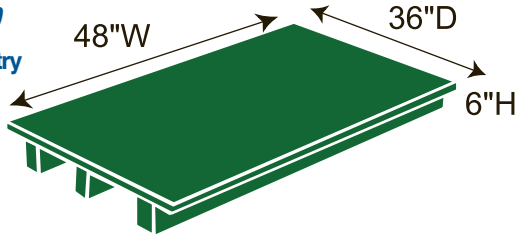

48406

48"W x 40"D x 6"H
Wt. Cap.: 2000 lbs.

End Cap

- 4 way entry

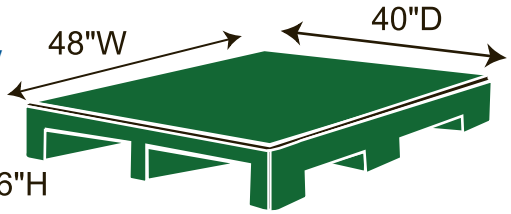

48426 HP/FL

48"W x 42"D x 6"H
Wt. Cap.: 2000 lbs.

End Cap / Spot Merchandiser

- 4 way entry

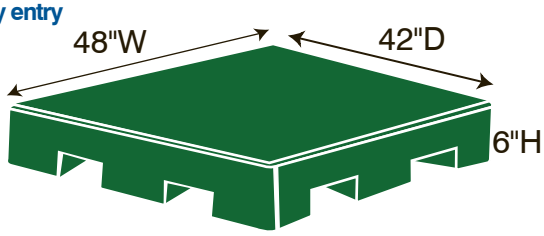

48486 HP/FL

48"W x 48"D x 6"H
Wt. Cap.: 2000 lbs.

End Cap / Spot Merchandiser

- 4 way entry

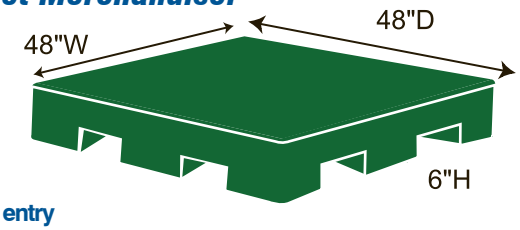

Also Available:
Model 48486 SF
Solid front/2 way entry

PRODUCT CATALOG

Beverage Bases • Spot Merchandisers, End Caps • Side Stacks

10 Year WARRANTY

Display Bases Pallet Jack / Forkliftable

21166 SS	21"W x 16"D x 6"H Wt. Cap.: 1000 lbs.
24156 SS	24"W x 15"D x 6"H Wt. Cap.: 1000 lbs.
30246 SS	30"W x 24"D x 6"H Wt. Cap.: 1000 lbs.
48246 SS	30"W x 24"D x 6"H Wt. Cap.: 1000 lbs.
482412 SS	48"W x 24"D x 12"H Wt. Cap.: 1500 lbs.

- Solid all four sides
- Seamless one piece construction
- Available with heavy duty casters

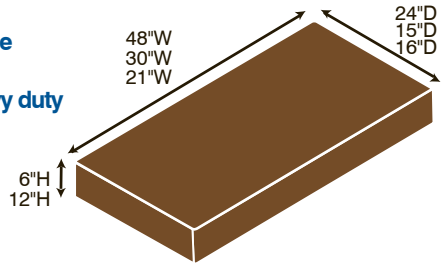

50506 SF	50"W x 50"D x 6"H Wt. Cap.: 2000 lbs.

Spot Merchandiser

- Solid Front
- 2 way entry
- Pallet jack / forkliftable

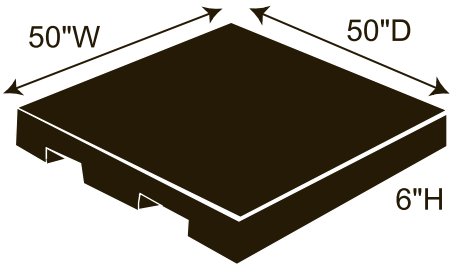

Also Available:
Model 50506 HP/FL with 4 way entry

58376 HP/FL	58"W x 37"D x 6"H Wt. Cap.: 5000 lbs.

End Cap / Spot Merchandiser

- 2 way entry
- Pallet jack / forkliftable

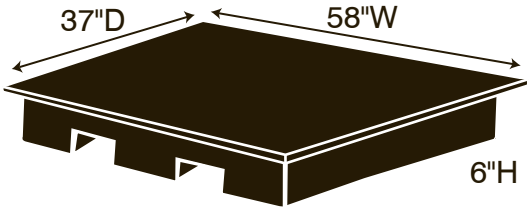

32166	32"W x 16"D x 6"H Wt. Cap.: 500 lbs.

Beverage Base

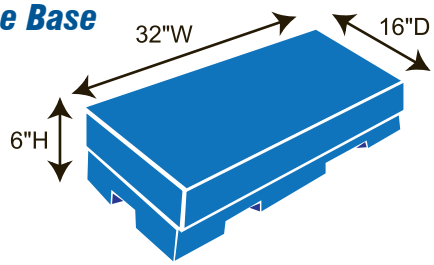

48146 BB	48"W x 14"D x 6"H Wt. Cap.: 500 lbs.

Beverage Base

- Pallet jack / forkliftable

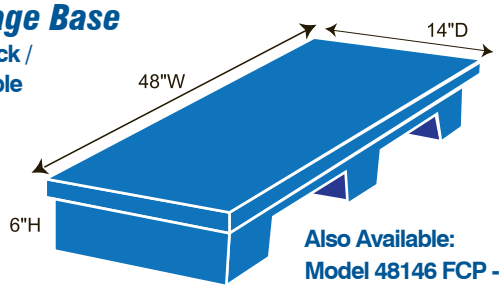

Also Available:
Model 48146 FCP - Solid front

PolyMight 601616 HD	60"W x 16"D x 16"H Wt. Cap.: 750 lbs.

- Pallet jack/forkliftable
- Extra heavy duty
- 9 legs

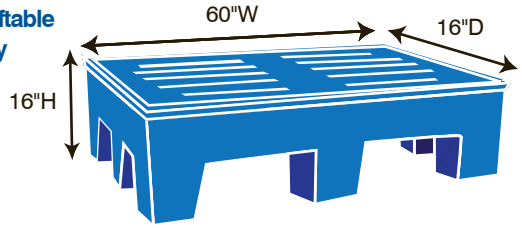

40205 SSP	40"W x 20"D x 5"H Wt. Cap.: 750 lbs.

Safety Step Platform / Display Base

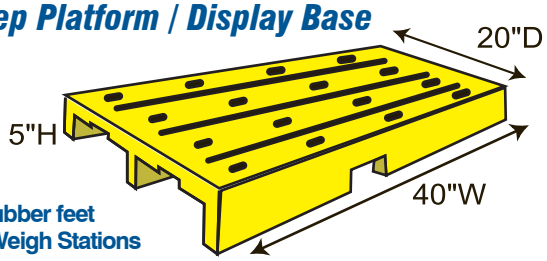

- Non-skid rubber feet
- Cashiers, Weigh Stations

Spectrum — Extra Heavy Duty

DUN 2436	36"W x 24"D x 12"H	Wt. Cap: 1500 lbs.
DUN 2448	48"W x 24"D x 12"H	Wt. Cap: 2000 lbs.
DUN 2460	60"W x 24"D x 12"H	Wt. Cap: 3000 lbs.

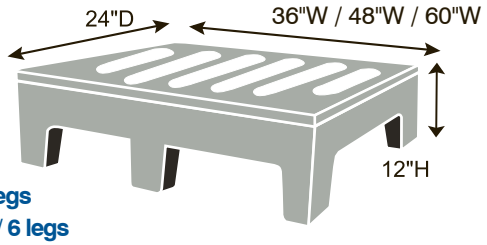

- 30" Units / 4 legs
- 48"/60" Units / 6 legs

Econ-o-Dun — Dunnage Racks

182212 EC	18"W x 22"D x 12"H	Wt. Cap: 750 lbs.
362212 EC	36"W x 22"D x 12"H	Wt. Cap: 1000 lbs.
482212 EC	48"W x 22"D x 12"H	Wt. Cap: 1200 lbs.
482218 EC	48"W x 22"D x 18"H	Wt. Cap: 1200 lbs.
602212 EC	60"W x 22"D x 12"H	Wt. Cap: 1500 lbs.

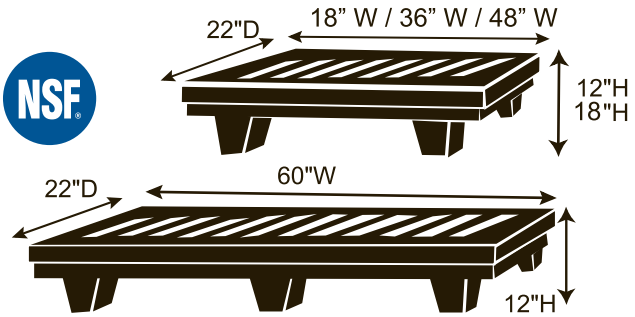

182212 SS-1

18"W x 22"D x 12"H
Wt. Cap.: 750 lbs.

Step Stool / Aisle Display

- Strong, stable, with flared legs
- Bright OSHA colors available
- Anti-slide top

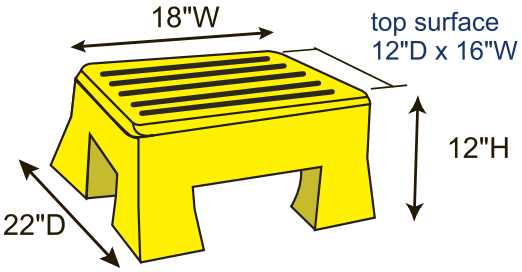

Standard Colors

#3 Safety Yellow
#4 Light Grey
#5 White
#6 Black
#7 Medium Blue
#8 Navy Blue
#9 Bright Blue
#10 Orange
#11 Kelly Green
#12 Forest Green
#14 Bright Purple
#15 Brown
#16 Tan
#17 Bright Red
#18 Teal
#19 Bright Yellow
#23 Raspberry
#24 Purple
Silverstone
Sandstone

We use fully U.V. stabilized polyethylene and color pigments suited for outdoor applications. These colors printed on paper are an appoximation of the actual pigmented colors. If color is critical, you may request a pigmented color chip from us.

Bulk Produce Merchandisers

Base Table
484024 HD

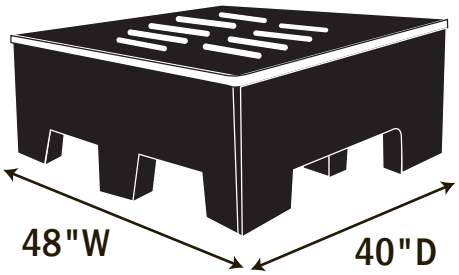

Tray for Table
48404 T

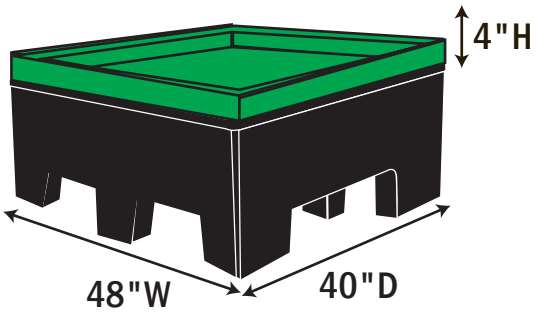

Riser for Table
484019 R

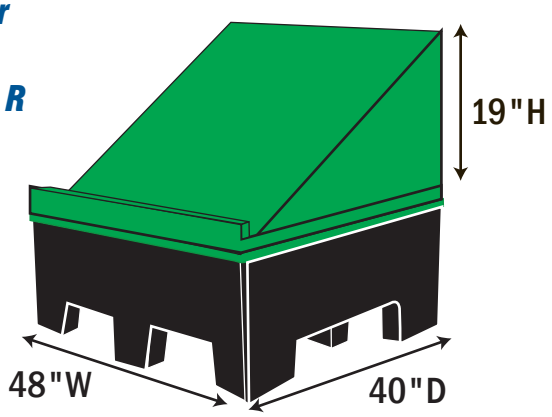

HighBoy

Table-top Merchandiser

483624 HD	48"W x 36"D x 24"H	Wt. Cap: 2000 lbs
484014 HD	48"W x 40"D x 14"H	Wt. Cap: 2000 lbs.
484024 HD	48"W x 40"D x 24"H	Wt. Cap: 2000 lbs.
484030 HD	48"W x 40"D x 30"H	Wt. Cap: 3000 lbs.
601616 HD	60"W x 16"D x 16"H	Wt. Cap: 3000 lbs.

- Extra Heavy Duty
- Oversize 7th leg in center for extra strength

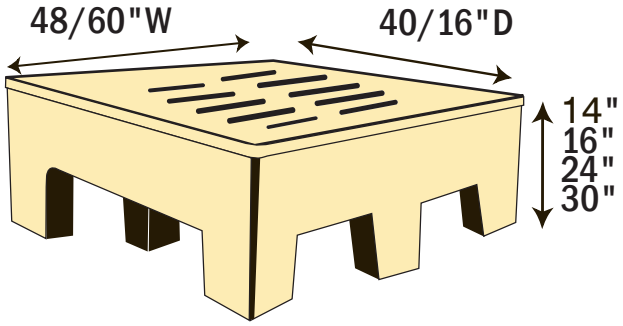

PR 4839 SM	48"W x 39"D x 9"H Wt. Cap.: 1000 lbs.
PR 4840 LG	40"W x 48"D x 16"H Wt. Cap.: 1000 lbs.

Riser/Step Up

Fits on top of 484024 HD Tables
484030 HD
484014 HD

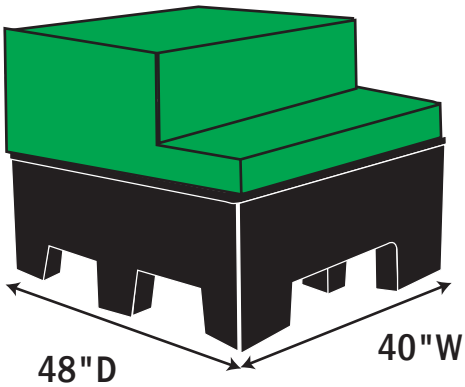

PRODUCT CATALOG

Recycling Centers
Indoor / Outdoor

OTRC — 23"W x 23"D x 38"H

Open Top Recycling Center

- Separate 55 gallon inner bin

MRC — 19"W x 15"D x 30"H

Mini Recycling Center

- Offices
- Cart Corrales
- Small areas

HRC — 23"W x 23"D x 48"H

Hooded Refuse / Recycling Center

- Separate 55 gallon inner bin

RETAILER CHOICE
CSP
BEST NEW PRODUCT
WINNER

DHRC — 46"W x 23"D x 48"H

Dual Hooded Refuse/Recycling Island

- Two separate 55 gallon inner bins
- Optional base available

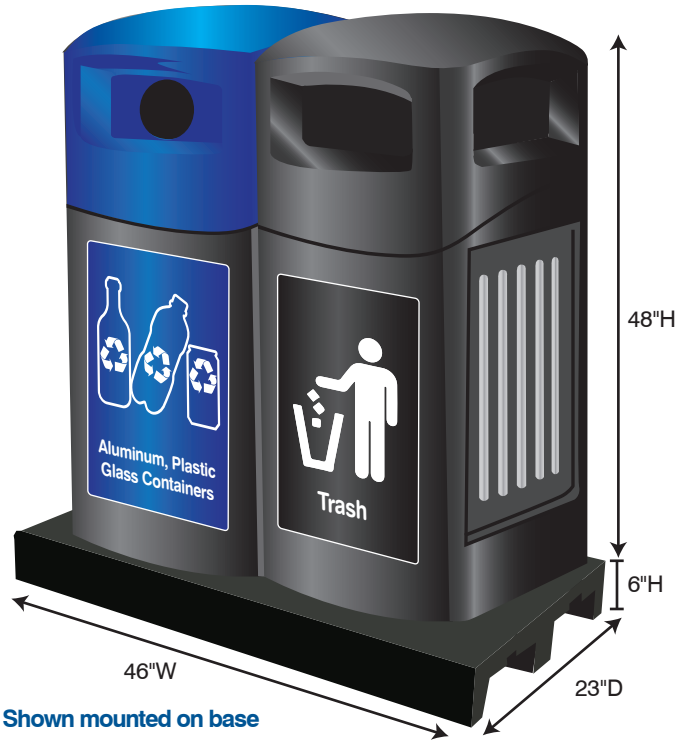

Shown mounted on base

Products listed available with optional side sign holders, lid cables, tie-down kit and custom graphics.

Front Case Platform

48144 FCP
48"W x 14"D x 4"H Wt. Cap.: 500 lbs.

- Increase selling space under counters, in produce and bakery areas

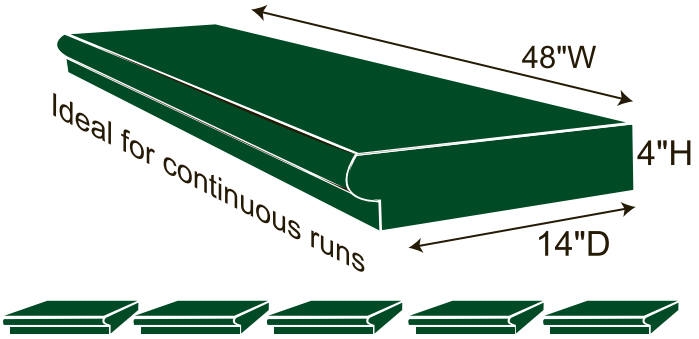

Front Case Platform

96144 FCP
96"W x 14"D x 4"H Wt. Cap.: 650 lbs.

- Add more selling space
- Use under refrigerated cases
- Increase sales with tie-ins

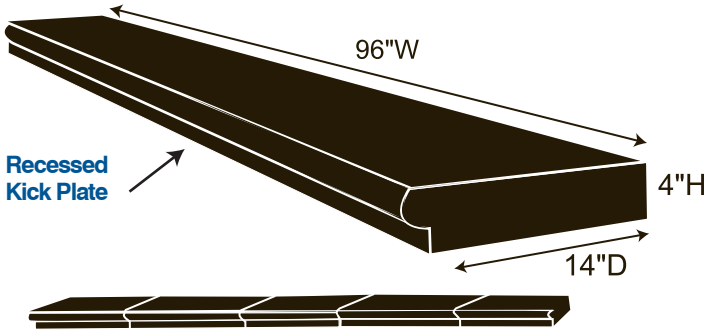

36126

36"W x 12"D x 6"H
Wt. Cap.: 500 lbs.

Front Case Platform

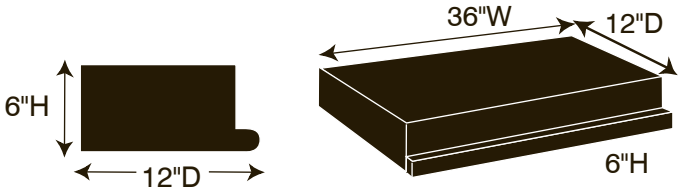

2-Tier Merchandiser

481818-2T

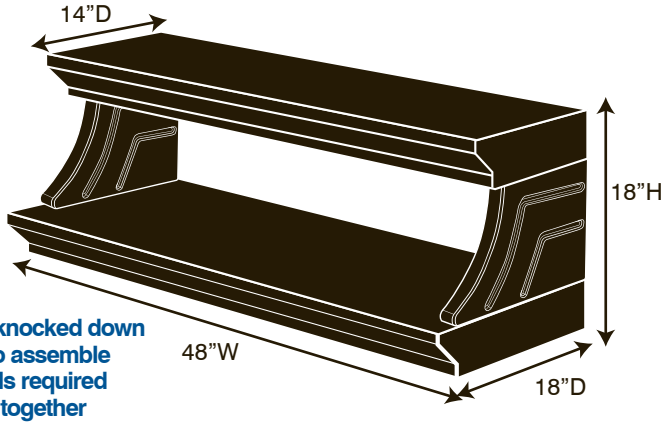

- Ships knocked down
- Easy to assemble
- No tools required
- Snaps together
- Use under counters produce, bakery areas

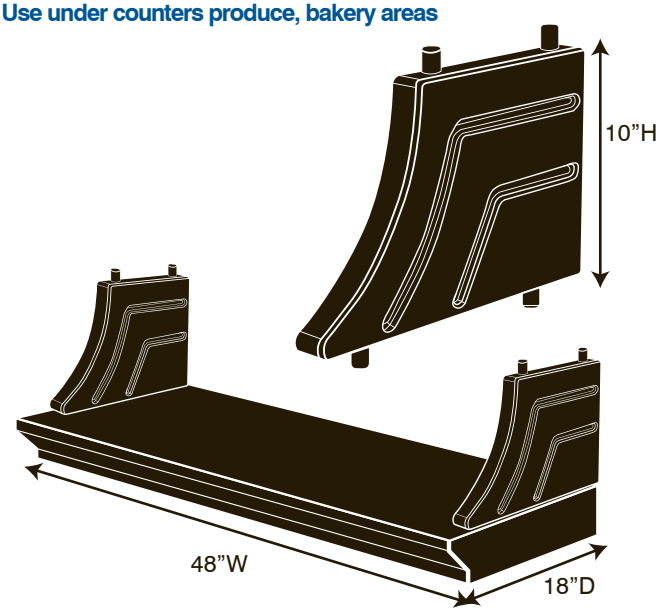

WD 24

24"W x 12"D x 13"H
Wt. Cap.: 5 bottles

Wine Display

- Highlight and promote sales

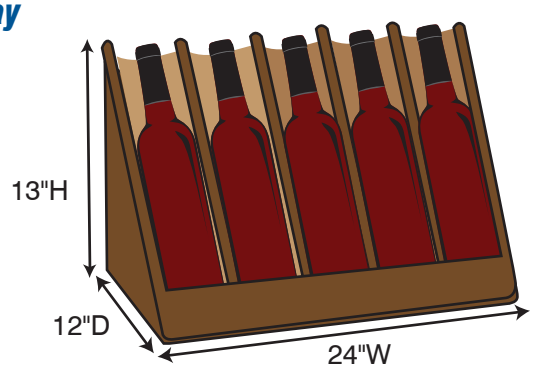

PRODUCT CATALOG

Patented
Pallet Guard Systems

Nestable Storage
Display and Shipping Pallets

48486 STF

48"W x 48"D x 5"H
Wt. Cap.: 3000 lbs.

Full Size

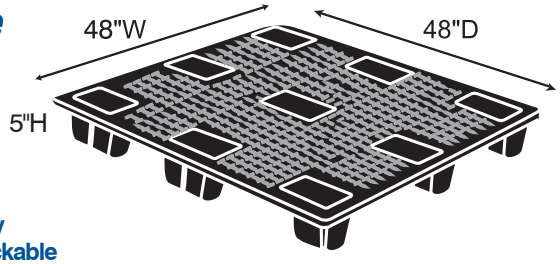

- 4 way entry
- Option: rackable
- 9 legs

48245 NP/120 EC

40"W x 24"D x 5"H
Wt. Cap.: 1500 lbs.

Half Sizes

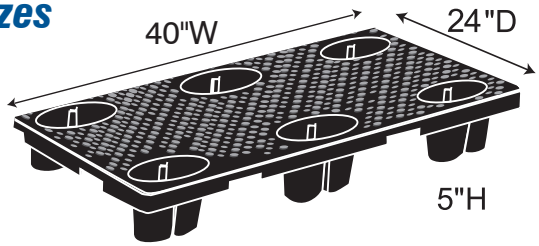

48205 NP/120 EC

48"W x 20"D x 5"H
Wt. Cap.: 1500 lbs.

Half Sizes

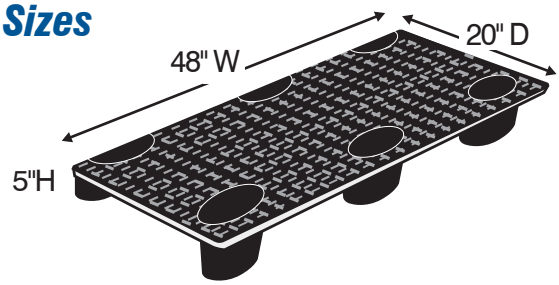

48245 NP/120 EC

48"W x 24"D x 5"H
Wt. Cap.: 1500 lbs.

Half Sizes

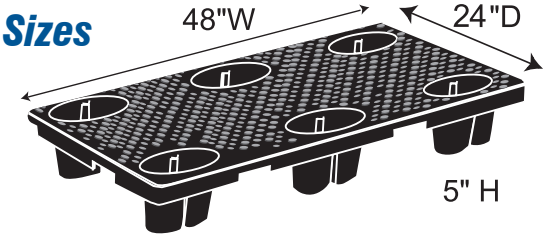

Pallet Guard

6"H, 9"H and 12"H
Adjustable and Continuous

Available in 6", 9", and 12" Heights

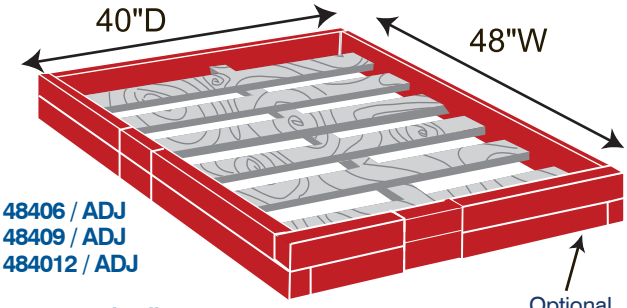

PG 48406 / ADJ
PG 48409 / ADJ
PG 484012 / ADJ

- Covers wood pallets
- Telescopes from 39" to 56" long
- Easy set up
- Helps prevent lawsuits, tripping and damaged products

Telescoping Continuous Run

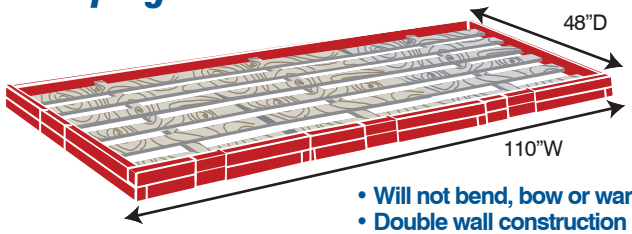

- Will not bend, bow or warp
- Double wall construction

48406 PP

48"W x 40"D x 6"H
Adjustable, not continuous

CG-17

Corner Guard

- Reduces injuries
- Prevents carts from damaging products
- Locks onto 6" Pallet Guard

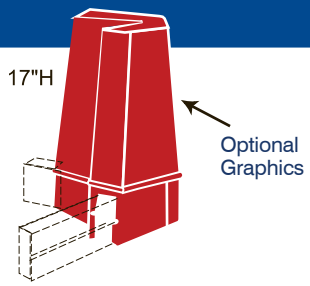

48405 NP/120 EC

48"W x 40"D x 5"H
Wt. Cap.: 3000 lbs.

Full Size

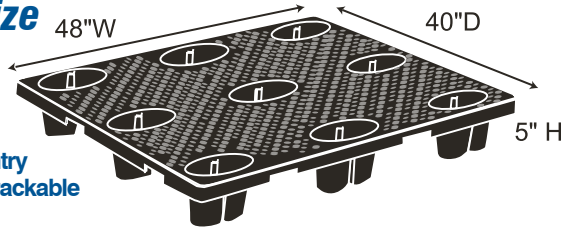

- 4 way entry
- Option: rackable
- 9 legs

Floral Cubes

2 Heights
Wt. Cap.: 100 lbs.

FC-12126 SB
12"W x 12"D x 6"H

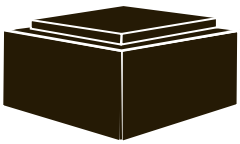

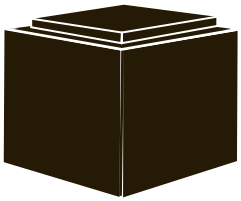

FC-121212 SB
12"W x 12"D x 12"H

- **Nesting feature**
- **Extra heavy duty**
- **Also available as open bottom - bucket Models FC-12126-OB, FC-121212-OB**

Bulk Display Fixture

- **Ships knocked down**
- **No tools required to assemble**
- **Durable shelves and molded spacers -**

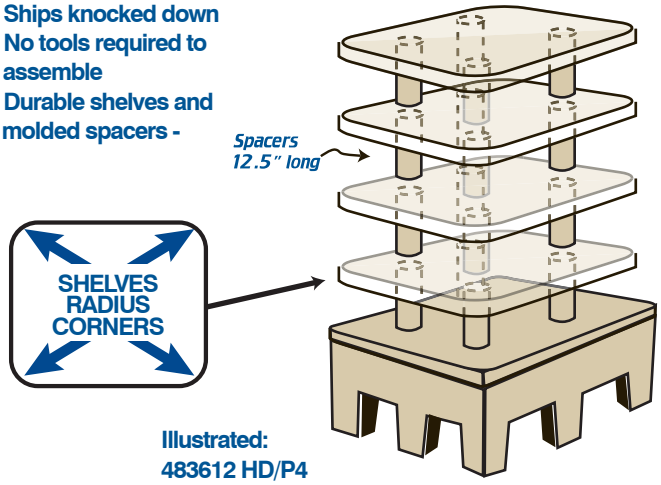

Illustrated:
483612 HD/P4
48"W x 36"D x 12"H base

8 SIZES

Model No.	Size
481812 HD/P4	48"W x 18"D x 12"H
362412 HD/P4	36"W x 24"D x 12"H
482412 HD/P4	48"W x 24"D x 12"H
602412 HD/P4	60"W x 24"D x 12"H
483612 HD/P4	48"W x 36"D x 12"H
484014 HD/P4	48"W x 40"D x 14"H
603012 HD/P4	60"W x 30"D x 12"H
603612 HD/P4	60"W x 36"D x 12"H

Floral Stair Step

FL-2 Step
24" W x 36" D x 24"H

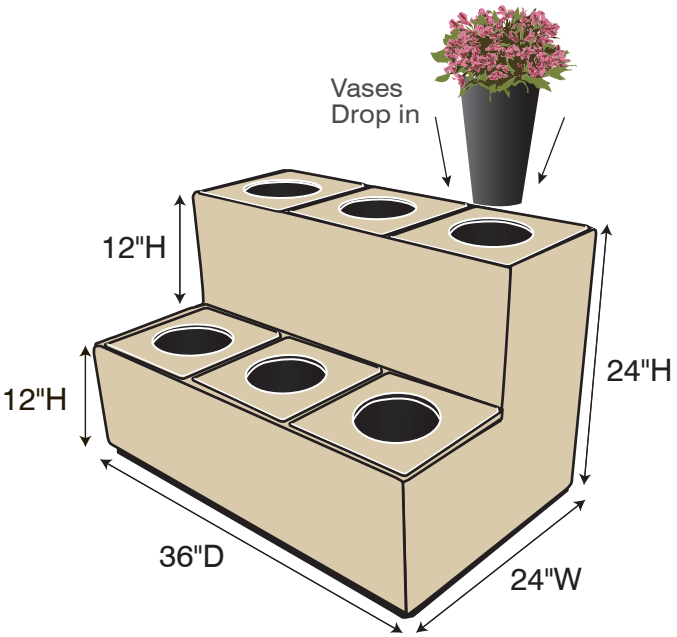

- **Vases sold separately**

Floral Stair Step

FL-3 Step
48" W x 36" D x 36"H

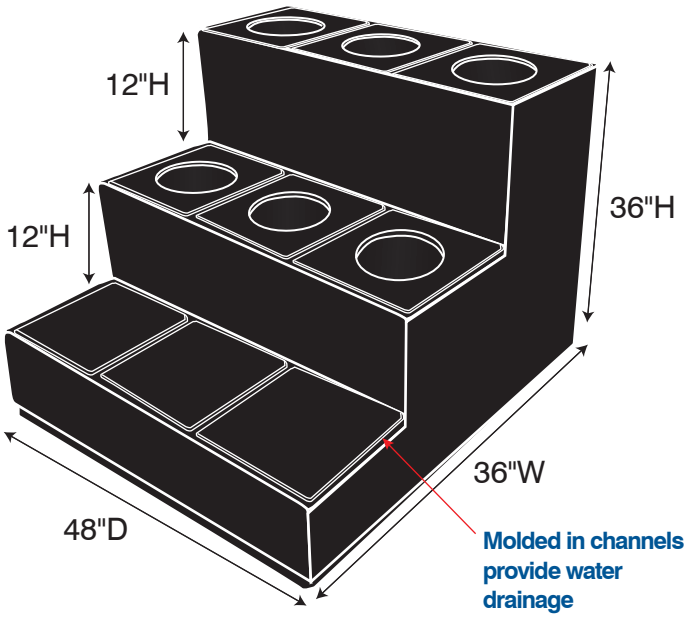

Display Fixture

321654 DF
32"W x 16"D x 54"H

- 3 wire shelves

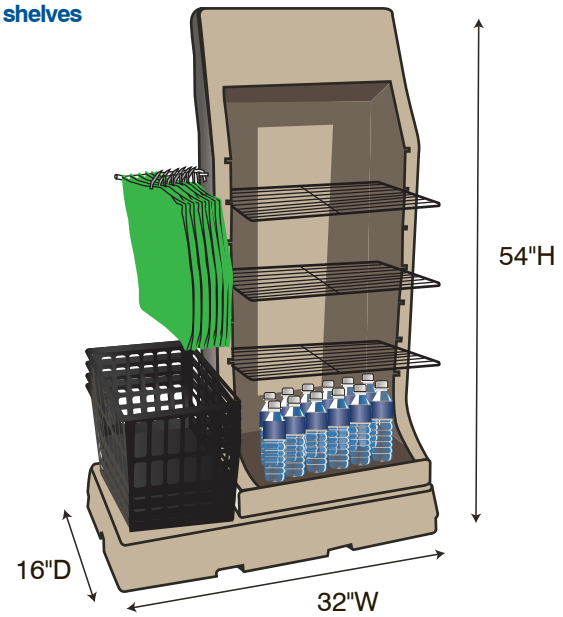

Adjustable Shelf Merchandiser

201548 SM
20"W x 15"D x 48"H

- 3 wire shelves

WD 60

18.75"W x 15.5"D x 55.5"H
Wt. Cap.: 60 bottles

Wine Rack

- Holds 60 Bottles
- No assembly required
- Optional header sign

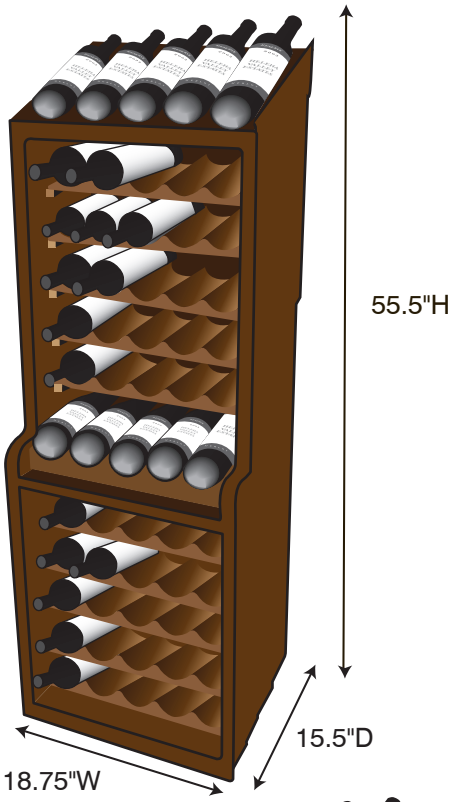

Optional: Upright storage for 60 bottles

- Optional header sign

All product listed available with optional custom graphics.

Display/Filler Cubes

10 sizes

200-12126	12"W x 12"D x 6" H	Wt. Cap.: 100 lbs.
200-12128	12"W x 12"D x 8" H	Wt. Cap.: 100 lbs.
200-121212	12"W x 12"D x 12" H	Wt. Cap.: 100 lbs.
200-181212	18"W x 12"D x 12" H	Wt. Cap.: 125 lbs.
200-24128	24"W x 12"D x 8" H	Wt. Cap.: 150 lbs.
200-241212	24"W x 12"D x 12" H	Wt. Cap.: 150 lbs.
200-242424	24"W x 24"D x 24" H	Wt. Cap.: 250 lbs.
200-301212	30"W x 12"D x 12" H	Wt. Cap.: 175 lbs.
200-48128	48"W x 12"D x 8" H	Wt. Cap.: 150 lbs.
200-481216	48"W x 12"D x 16" H	Wt. Cap.: 150 lbs.

- **Will Not Chip or Crack - Super Sanitary**
- **Non-Skid Rubber Feet**
- **One Piece Construction**
- **Optional Graphics**

200-242424

Optional decals/colors available.

200-121212

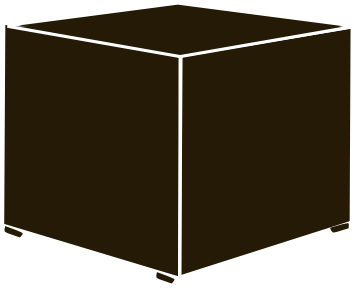

200-24128

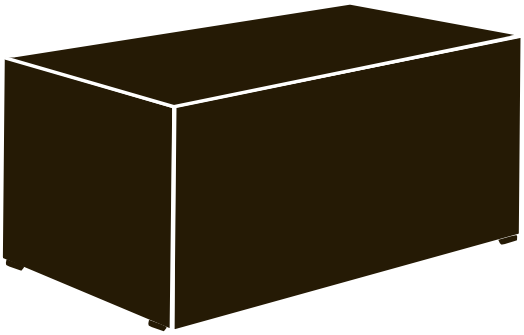

200-301212

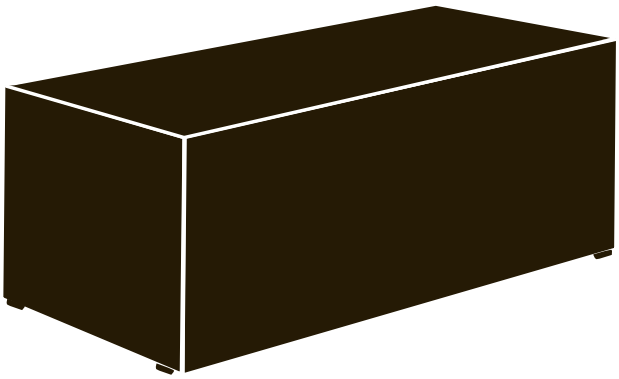

200-181212

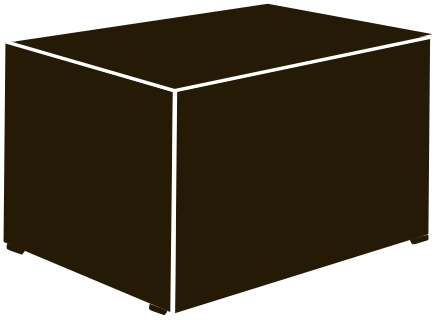

PRODUCT CATALOG

Round Displays • Expandable Dollys
Display Bases

10 Year WARRANTY

Specialty Merchandisers • Outdoor Signs
Parking Lot Signa • Sign Frames

R166 PX	16” Diameter Wt. Cap.: 500 lbs.
R306 PX	30” Diameter Wt. Cap.: 750 lbs.

Round Display Bases

- Aisle Merchandiser
- Impulse Sales

Optional:
fiberboard or plastic shelves

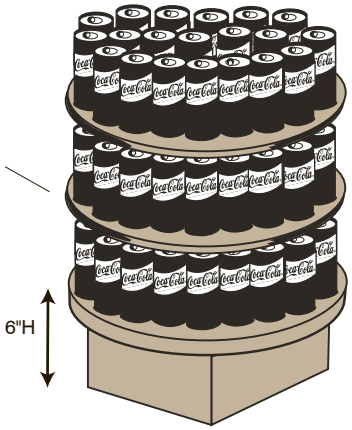

16193	16"W x 19"D x 3"H Wt. Cap.: 500 lbs.
13193	13"W x 19"D x 3"H Wt. Cap.: 500 lbs.

Expandable Dolly / Display Base

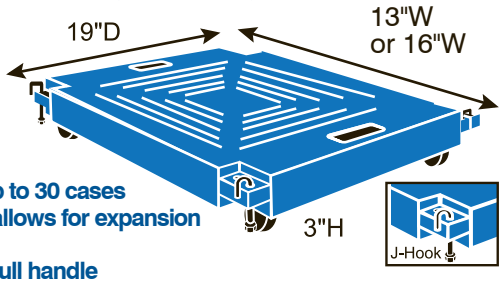

- Stacks up to 30 cases
- J-hooks allows for expansion
- 4 casters
- Option: Pull handle

2945SIGNF	29"W x 45"H
4661SIGNF	46"W x 61"H

Wall Signs

- Non-rusting plastic
- Posters slide in easily from top or bottom
- Economically priced

SS	48"W x 30"D x 81"H

Super Sign

- Poster Size 64" x 44"
- Signs on both Sides
- Port for sand/water

Parking Lot Sign

Options:
- Lot Sign
- Quick Stop
- Handicap
- Parents/Children
- Handicap/Van

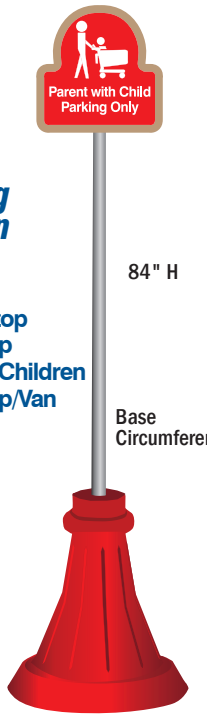

DS AB-41	28"W x 16"D x 41"H
DS AB-48	32"W x 16"D x 48"H

Double Sided Sign

- Indoor/Outdoor use
- Metal snap frame design both sides
- Bottom weighted, fill with sand or water

Posters on
Both Sides

FORECOURT PRODUCTS

Mass Merchandisers • Supermarkets | **Convenience Store • Fuel Chains**

HWSC — 23"W x 23"D x 48"H

Hooded Windshield Service Center

- Separate 38 gallon inner bin
- Towel dispenser
- Large water bucket

Wall Mount Windshield Service Center available

WSC — 23"W x 23"D x 38"H

Windshield Service Center

- Towel dispenser
- Large water bucket
- Designed to conceal trash bags
- Separate 38 gallon inner bin
- Bin designed to conceal trash bags

TSWSC — 23"W x 32"D x 38"H

Truck Stop Windshield Service Center

- 10 Gallon washer bucket
- Separate 55 gallon inner bin

DWSC — 46"W x 23"D x 38"H

Dual Windshield Service Center

- Towel dispensers / Large water buckets
- Two Separate 38 gallon inner bins
- Large sign optional

Shown with optional base

All units available with optional graphics, tie-down kit, lid cables. Side poster sign holders optional.

Malibu Bench

4" Portable or In-ground w/black legs
6" Portable or In-ground w/black legs

Traditional Bench

4" Portable or In-ground w/black legs
6" Portable or In-ground w/black legs

Durabench

4" Portable or In-ground w/black legs
6" Portable or In-ground w/black legs

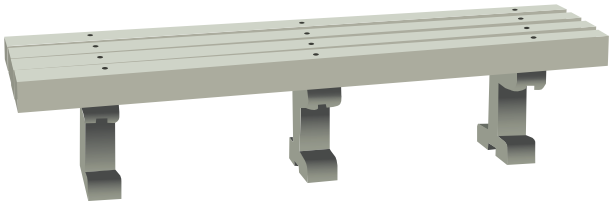

SP

18"W x 18"D x 16"H

Square Planter

- Impervious to Weather

Stair Steps

2 Step: 362424-2
36"W x 24"D x 24"H wt. cap.: 1200 lbs.

2 Step: 482424-2
48"W x 24"D x 24"H wt. cap.: 1500 lbs.

3 Step: 483636-3
48"W x 36"D x 36"H wt. cap.: 1500 lbs.

Available with optional front sign channels

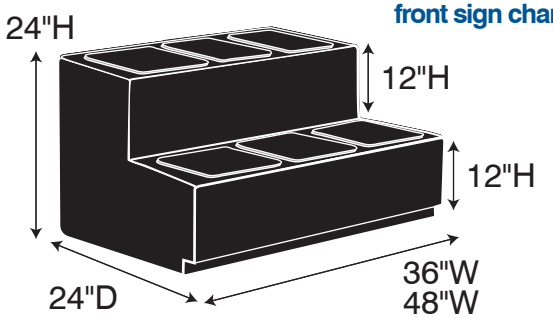

- One piece heavy duty molded construction
- Use indoors/outdoors
- No assembly required

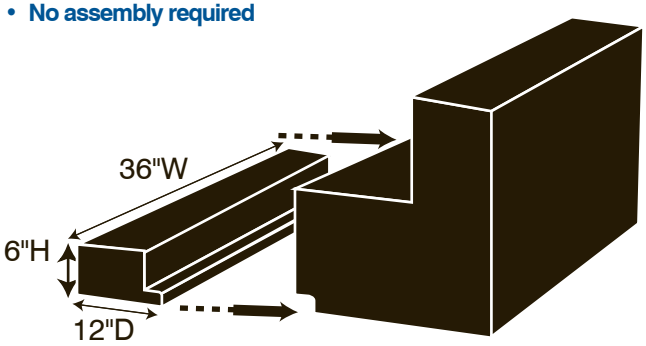

36126
Optional third step

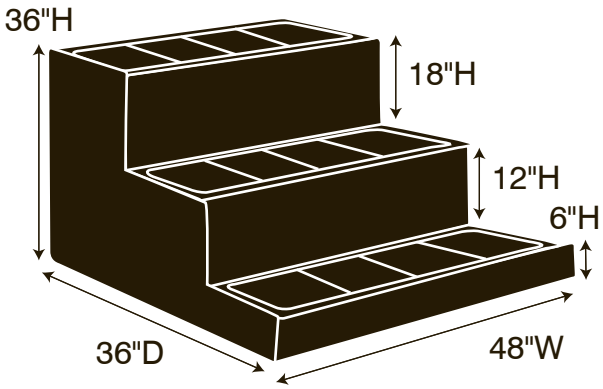

FORECOURT PRODUCTS

CAB 463150 | 46"W x 31"D x 50"H

Plastic Outdoor Cabinet

- Non-rusting plastic
- 2 Locking Plastic Doors
- 1 Locking Door / 1 Back Wall
- No Doors
- Back Wall Only - Open Front

Available with or without Locking Doors

CAB 482447
CAB 302447

48"W x 24"D x 47"H
30"W x 24"D x 47"H

Aluminum Roll Top Cabinet

- Easy glide pull-down aluminium front door
- 2 Handles, 3 Shelves
- Padlocked aluminum door, prevents theft

17"W x 16"D x 38"H | **MWC**

New! Mobile Water Caddy

- 16-gallon capacity
- Easy fill water port
- Storage for fluid tablets/squeegees
- 6" wheels

RETAILER CHOICE CSP BEST NEW PRODUCT FINALIST

SS5-LD | 18"W x 21"D x 46"H

SS8-DD | 20"W x 22"D x 51"H

Locked Outdoor Storage Cabinets

- Single and double door models
- Store toxic clean-up materials or pump island cleaning products right at the pump
- Key or combination locks available

RETAILER CHOICE CSP BEST NEW PRODUCT WINNNER

Additional storage area